I/O Connectors
Header, Series III, SMT

Centerline — 0.80 [.031]
With Holddowns — No
Shielded — Yes
Housing Material — Nylon
Housing Material Flammability Rating — UL 94V-0
Contact Material — Phosphor Bronze
Contact Plating — Gold (10) over Paladium Nickel (40)
Contact Underplating — Nickel (50)
Solder Tail Plating — Tin-Lead (150)
Shield Material — Stainless Steel
Shield Plating — Tin-lead
Packaging Method — Tape & Reel
PC Card Headers — see page 49 in Sockets Section

Technical Documents
Application Specifications — 114-6058

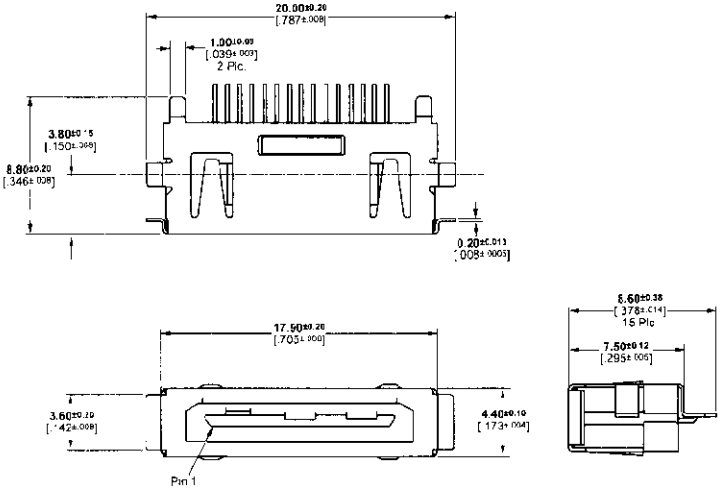

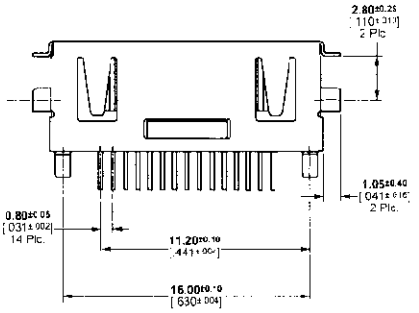

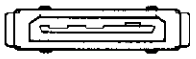
Keying Option 1

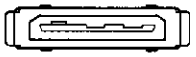
Keying Option 2

Keying Option 3

Keying Option 4

Keying Option 5

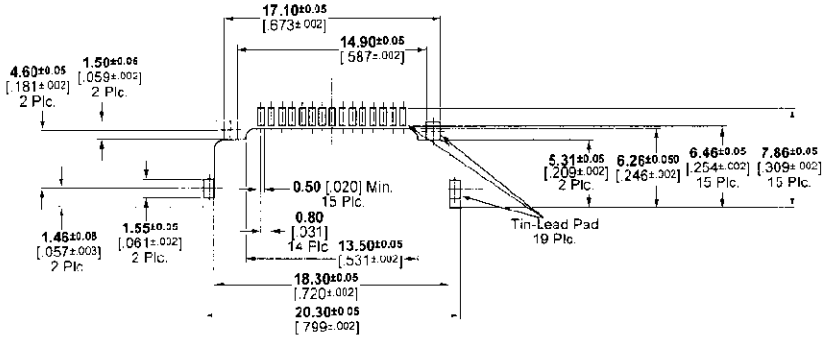

Recommended PC Board Layout

No. of Positions	PCB Offset	Color	No. of Contacts Loaded	Keying 1	Keying 2	Keying 3	Keying 4
15	.000 [0.0]	Black	15	5-569331-1	5-569331-2	5-569331-3	5-569331-4
15	.000 [0.0]	Natural	14	5-1116244-1	—	—	—
15	.000 [0.0]	Natural	15	5-569491-1	—	5-569491-3	—
15	0.41 [.016]	Black	15	5-558556-1	5-558556-2	5-558556-3	5-558556-4

Note: Receptacle should have the same PCB offset as Header.